ASIAN JOURNAL OF CIVIL ENGINEERING (BUILDING AND HOUSING) VOL. 8, NO. 3 (2007)
PAGES 239-246

WIND LOADS ON BUILDINGS WITH ATTACHED CANOPIES

R. Goyal[*a], A.K. Ahuja[b] and J. Prasad[b]
[a]Department of Civil Engineering, MMEC, Mullana, Ambala, India
[b]Department of Civil Engineering, I.I.T.R., Roorkee, India

ABSTRACT

It is a general practice to provide a flat or sloping slab called canopy at the entrance door of the building at the ground level wherever space permits. This may be cantilever type slab or supported one. While designing various structural elements and cladding units of buildings for wind loads, values of wind pressure coefficients are obtained from relevant code of practice where in the values are available for buildings with plane cladding only. Very limited information is available regarding wind pressure on canopies in codes of practice on wind loads including Indian Standard Code of Practice. Present paper enumerates the available codal information with respect to wind loads on buildings with attached canopies. It also describes in brief the latest research work done in this area.

Keywords: attached canopies, low-rise buildings, pressure coefficients, wind loads

1. INTRODUCTION

Most of the low-rise buildings are used for residential purposes and thus provided with different types of projections for the convenience of the users of the buildings. The projections may be the sunshades, overhangs, parapets, balconies and canopy (Figure 1). Depending upon the requirement, a building may have a single type of projection or the combination of different projections.

Window and ventilator openings are provided on the exterior walls of building. In order to check the entry of sun-rays and rain water, sunshades are generally provided on these openings. In case of sloping roofs (gable and hip type), roof is generally projected towards the ground, thus introducing an overhang. In case of low-rise buildings with flat roofs where access is generally provided to go to the roof, parapets are built. These may be solid or perforated type. Sometime broken or continuous balconies are also provided on the exterior surfaces (Figure 2). Generally at the ground level a slab called canopy is made at the entrance door of the building. This may be cantilever type slab or supported one (Figure 3). At specific locations, canopies are enclosed from two sides thus named as carports (Figure 4).

While designing a building with projections, a special attention is required for safe design

[*] Email-address of the corresponding author: rajesh_goel78@yahoo.co.in

of building as well as projection itself. The presence of such projections affects the wind pressure coefficients to a large extent. As mention above, for design of various structural elements and cladding units, values of pressure coefficients are obtained from relevant code of practice. The codes of practice of various countries give these values for different plan shapes, wind incidence angles and roof slope angles.

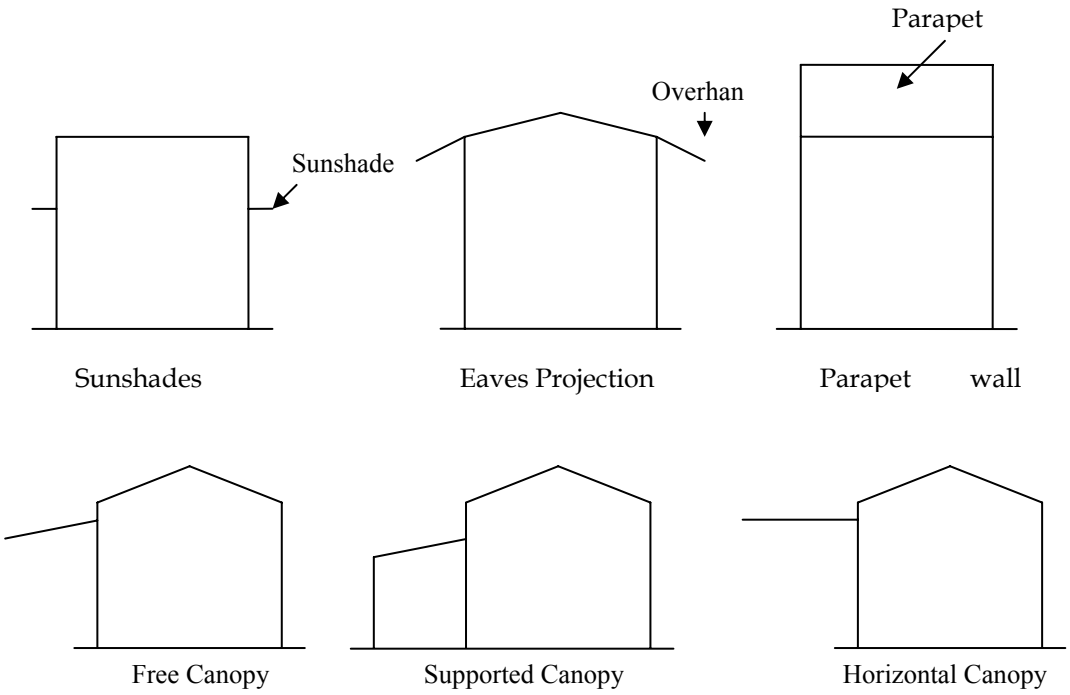

Figure 1. Various types of projections on low-rise buildings

Figure 2. A hotel building with continuous balconies

Figure 3. Canopy at the entrance gate of an educational building

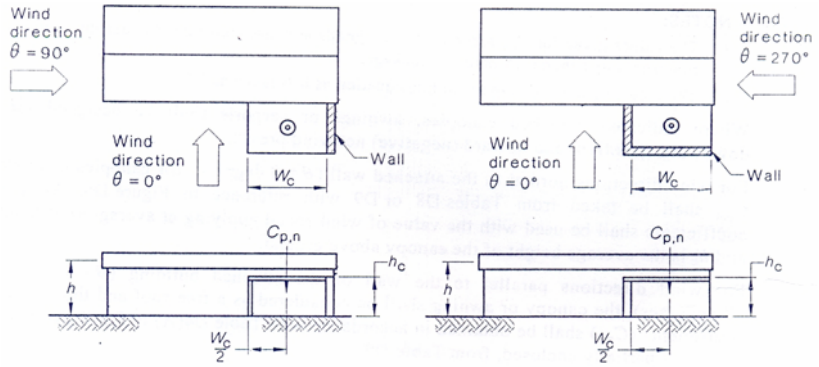

Figure 4. Carports attached to buildings [1]

2. CODAL PROVISIONS

The information available in codes of practices of various countries regarding influence of projections on wind loads is very limited. The available information in the Indian Standard on Wind Loads [2] and the Australian/New Zealand Standard on Wind Loads [1] are briefly described below.

2.1 IS: 875 (Part-3)-1987 [2]

Available information regarding wind pressure coefficients on canopies as given in Indian Standard on Wind Loads [2] (Table 1) are only for two wind directions, both being perpendicular to ridge (Figure 5).

Table 1. External pressure coefficients on canopies [2]

Portion	**External Pressure Coefficients (Cpe)**	
	Direction 1	**Direction 2**
a	From the diagram	
b	Cpe = - 0.5, $\frac{h_1}{h_2} \leq 1.5$ Cpe = -0.7, $\frac{h_1}{h_2} \rangle 1.5$	- 0.4
e	See paragraph below	

The pressure coefficients for the underside surface of the canopy (surface ‘e’ in Figure 5) shall be taken as follows and shall be taken as positive if the canopy is on windward side:

a) 1.25 if the canopy slopes,
b) 1.00 if the canopy is horizontal, and
c) 0.75 if the canopy slopes upwards.

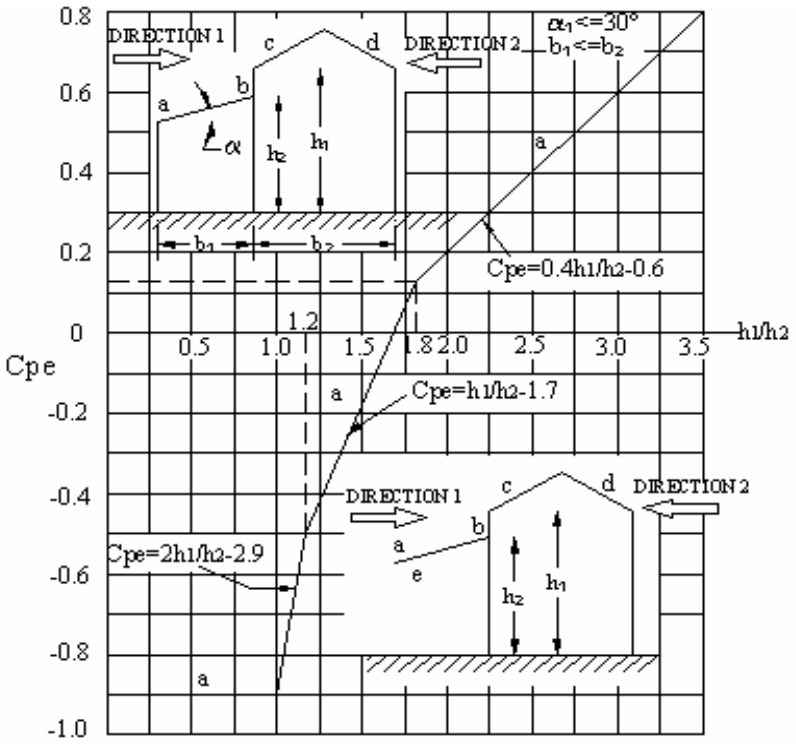

Figure 5. Free and supported canopies [2]

2.2 Australian/New Zealand Code AS/NZS 1170.2:2002 [1]

The recommendations of Australian/New Zealand Code AS/NZS 1170.2:2002 regarding net wind pressure coefficients on attached canopies (Figure 6) of sloping roof buildings with a roof slope of 10 degrees or less, are given in Table 2. The code recommends that the canopies should be designed for both downward (positive) and upward (negative) net wind pressures, where indicated. All pressure coefficients shall be used with the value of wind speed applying at average roof height (h).

Values of $(C_{p,n})$ in Table 2 are for wind direction normal to the attached wall. For wind parallel to the wall, it is recommended that canopy should be considered as free roof and net pressure coefficients should be obtained accordingly.

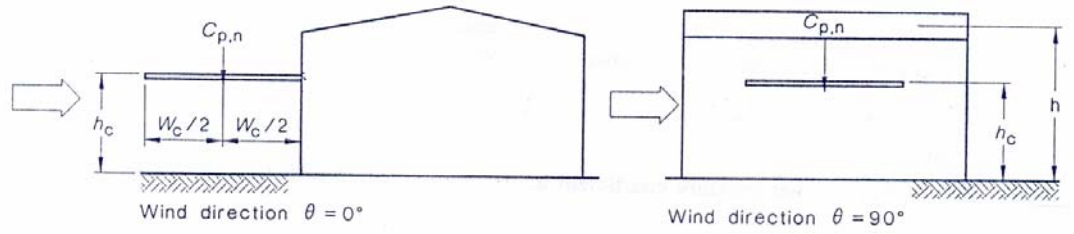

Figure 6. Sloping roof building with attached canopy [1]

Table 2. Net pressure coefficients for canopies attached to buildings [1]

Design Case	h_c/h **(see Note 1)**	**Net Pressure Coefficients** $(C_{p,n})$
$h_c/h \langle 0.5$	0.1	1.2, -0.2
	0.2	0.7, -0.2
	0.5	0.4, -0.2
$h_c/h \geq 0.5$	0.5	0.5, -0.3
	0.75	0.4, [-0.3 -0.2 (h_c/w_c)] or -1.5 (see Note 2)
	1.0	0.2, [0.3 -0.6 (h_c/w_c)] or -1.5 (see Note 2)

Notes: 1 For intermediate values of h_c/h, use linear interpolation.
2 Whichever is the lower magnitude.

3. RECENT RESEARCH WORK

Paluch et. al [3] present the results of an investigation on the influence caused by attached canopies on the static wind actions on arch roof industrial building (Figure 7).

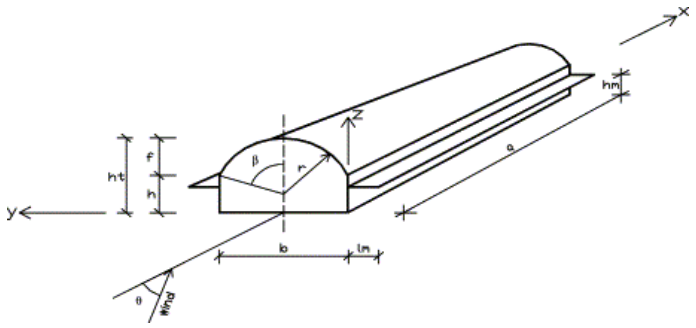

Figure 7. Geometric characteristics of building and canopies [3]

Six number scaled models of the arch roof building were tested with five types of canopies attached. Three of these canopies were instrumented and the static wind pressures were measured. It was concluded that the change of wind pressure over the roofs due to presence of canopies was noticeable.

Jancauskas and Holmes [4] investigated the forces exerted by the wind on attached canopies to low-rise buildings. It was demonstrated that the dominant net loads for the windward canopy on building with building height / canopy height ratio less than 2 were directed upward and happened for a wind direction perpendicular to the windward face where the canopy was attached as shown in Figure 8(a). However for building height/canopy height ratio greater than 2, the dominant net loads for the windward canopy were directed downward for the same wind direction as shown in Figure 8(b). Furthermore for this case, the highest peak upward net load occurs for a wind direction parallel to the face where the canopy was attached (θ=0°).

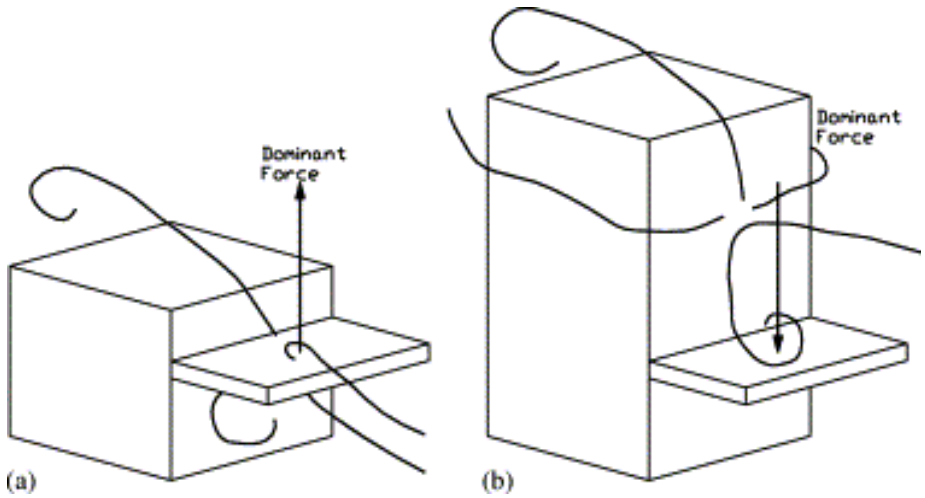

Figure 8. Wind loads on canopies for θ=90° [4]

Sunn [5] carried out experimental investigation to study the influence of the effect of canopies on wind loads on low-rise buildings. It involved testing of three gable roof models in close circuit wind tunnel at IITR. Length, breadth and eaves height of each model had been kept as 300x150x150 mm. Table 3 gives the details of models prepared. Model ‘A’ was instrumented with 314 pressure tappings. Models ‘B’ and ‘C’ were provided with 344 pressure tappings each. Figure 9 shows the dimensions of the model without canopy i.e. Model ‘A’.

Table 3. Dimensions of different models

Model No.	Building Dimensions				Canopy Dimensions			
	L mm	B mm	H (mm) eave height	Slope θ	L m	B mm	H (mm) from ground	Slope α
A	300	150	150	20°	Not Applicable			
B					75	50	75	0°
C								20°

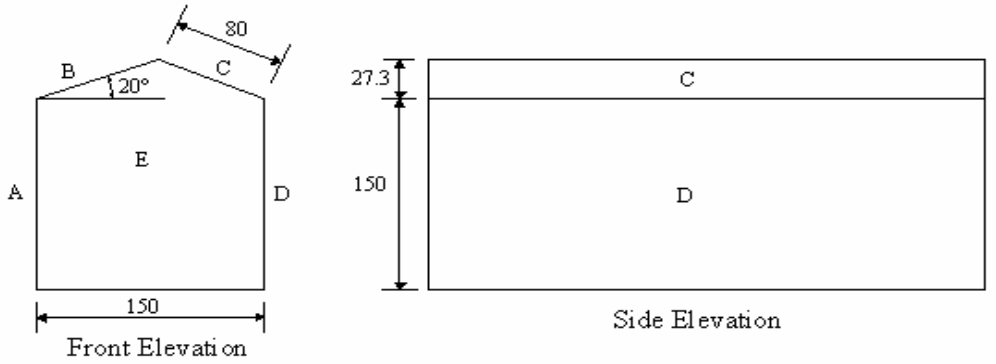

Figure 9. Details of Model 'A' [5]

4. CONCLUSIONS

Followings conclusions are drawn from the description given in the above articles:

1. Code of practice of different countries dealing with design of structures for wind load, including Indian Standard on Wind Loads, do not give enough information regarding wind pressure coefficients on the buildings with projections.
2. Very little experimental research work has been done so far on buildings with projections, particularly attached canopies.
3. It is, therefore, required to carryout further studies to investigate the effects of attached canopies on wind loads on buildings.

REFERENCES

1. AS/NZS 1170.2:2002, Australian/ New Zealand Standards, Structural design actions-Part-2, Wind actions, Jointly published by Standards Australia International Ltd., Sydney and Standards New Zealand, Wellington.
2. IS: 875 (Part-3)-1987, Indian Standard code of practice for design loads (other than

earthquake)-(Part 3-wind loads) for buildings and structures, Bureau of Indian Standards, New Delhi, India.
3. Paluch, M.J., Loredo-souza, A.M. and Blessmann, J., Wind loads on attached canopies and their effects on the pressure distribution over arch roof industrial building, *Journal of Wind Engineering and Industrial Aerodynamics*, **91**(2003) 975-994.
4. Jancauskas, L. and Holmes, J., Wind loads on attached canopies, *Proc. of the National Conference on Wind Engg.*, Texas Engineering University, Lubbock, 1985.
5. Sunn, A., Influense of canopies on wind loads on low-rise buildings, *M. Tech Dissertation*, Department of Civil Engineering, IITR, Roorkee, India, 2004.