ASIAN JOURNAL OF CIVIL ENGINEERING (BUILDING AND HOUSING) VOL. 10, NO. 1 (2009)
PAGES 97-112

# OPTIMUM DESIGN OF SINGLE LAYER NETWORK DOMES USING HARMONY SEARCH METHOD

S. Çarbaş and M.P. Saka
*Department of Engineering Sciences, Middle East Technical University, Ankara, Turkey*

## Abstract

Domes supply unimpeded wide spaces and they encompass a maximum amount of areas with a minimum surface. They are also exceptionally suitable structures for covering places where minimum interference from internal supports are required. The behavior of latticed domes is nonlinear due to change of geometry under external loads. This is due to the imperfections arising either from the manufacturing process and/or from the construction of the structure. In this paper, the optimum topological design problem of geometrically nonlinear single layer network dome is considered. The design problem is formulated such that the total number of rings, the height of the crown, and the steel pipe section designations required for the member groups in the dome are treated as design variables. The design limitations that consist of serviceability and strength constraints are implemented from LRFD-AISC. The solution of this discrete programming problem is determined by using the harmony search algorithm. This algorithm simulates jazz improvisation into a numerical optimization technique. Design example considered shows the effectiveness and robustness of the algorithm developed.

**Keywords:** Dome optimization; discrete optimum design; minimum weight; stochastic search technique; harmony search algorithm

## 1. Introduction

Domes provide economical solutions for covering large areas such as exhibition halls, concert halls and swimming pools. They also make elegant structures with their splendid aesthetic appearance. There are many types of latticed domes. Some of these are Schwedler domes, geodesic domes and lamella domes. Among these geodesic domes found wide application in practice [1]. However other types of domes are also used in number of large span structures in different parts of the world. Domes are lighter structures compare to more conventional forms of structures [2]. Domes are modeled as three dimensional structures where joints are considered to be rigidly connected. In such modeling dome members are exposed to both axial forces and bending moments. Moreover, dome members are slender elements where bending moments affect the axial stiffness of these members. Consequently, consideration of geometric nonlinearity in the analysis of these structures becomes important

if the real behavior these structures are intended to be obtained. Furthermore, the instability of domes is also required to be checked during the nonlinear analysis [2-3]. In some the optimum design algorithms developed for these structures recently, the nonlinear elastic behavior of latticed domes is considered [4-5]. It is shown that consideration of nonlinear behavior in the optimum design of these elegant structures does not only provide more realistic results, it also produces lighter structures [6-7]. In more recent studies the topology and the geometry of a dome structure are treated as design variables and the design algorithms presented determines the optimum number of rings, the optimum height of the crown as well as the optimum tubular cross sectional designations for dome members [8-9].

In this study optimum topology design algorithm based on harmony search method is developed for a network dome. The algorithm determines the optimum number of rings, the optimum height of crown and sectional designations for the members of a network dome under the external loads. The steel pipe sections list of the LRFD-AISC (Load and resistance Factor Design-American Institute of Steel Constitution) [10] are adopted for the cross sections of dome members. The algorithm developed selects appropriate sections from this list such that the weight of dome becomes the minimum. The optimum topology algorithm presented is based on harmony search algorithm [11-12] which is a recent addition to stochastic search techniques of combinatorial optimization [13]. Harmony search approach is based on the musical performance process that takes place when a musician searches for a better state of harmony. Jazz improvisation seeks to find musically pleasing harmony similar to the optimum design process which seeks to find optimum solution. The pitch of each musical instrument determines the aesthetic quality, just as the objective function value is determined by the set of values assigned to each decision variable. From the optimum structural design point of view the objective is to determine the appropriate steel sections for each group of a structure from the available steel sections set such that with these harmonies set of sections the response of the structure is within the limitations imposed by the design code and it has the minimum weight. This is similar to finding appropriate notes for a musical so that pleasing harmony can be achieved for the esthetic quality. In recent applications harmony search algorithm is successfully utilized to determine the optimum solutions of different structural design problems [5,8,15].

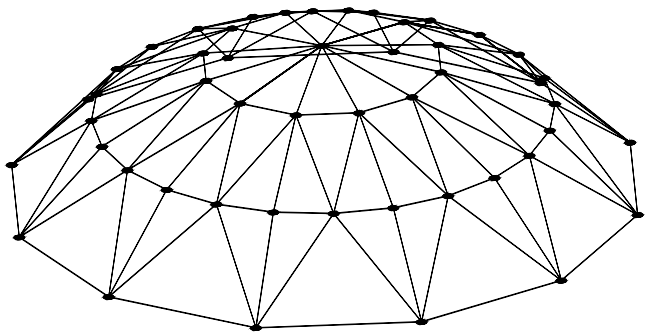

Figure 1. 3D view of a network dome

## 2. Automated Data Generation for the Geometry of Single Layer Network Dome

An elevation and plan of a single layer network dome is shown in Figure 1. It is possible to obtain the geometrical data that contains the joint coordinates and member incidences of such a dome such automatically if the values of three parameters are known. These parameters are the diameter D of the dome, the total number of rings $n_r$ in the dome and the height of crown of the dome respectively.

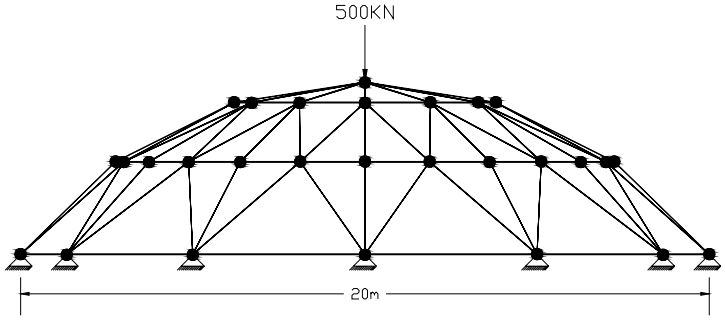


(a) Elevation

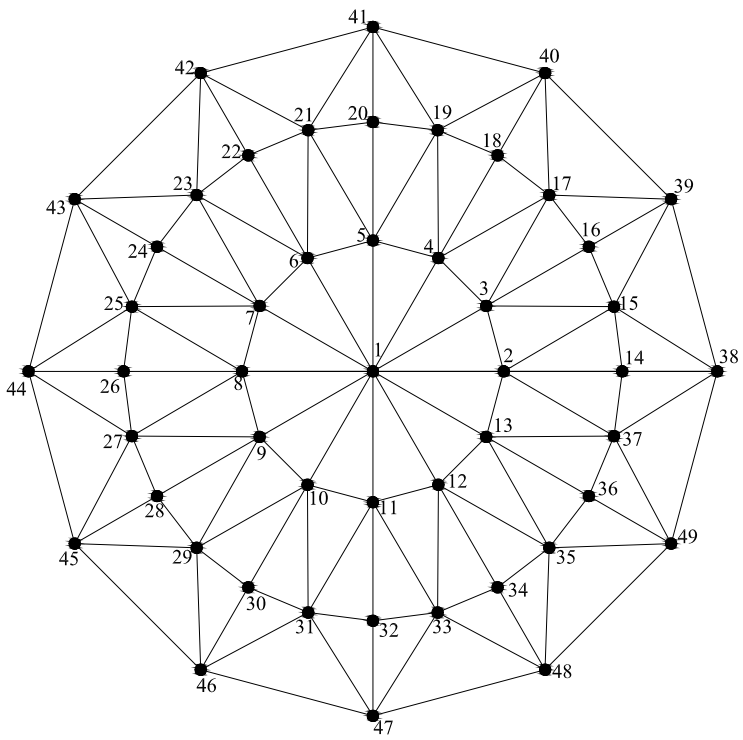


(b) Plan

Figure 2. Side and top view of network dome

The distances between the rings on the meridian line of these domes are generally made to be equal to each other. It can be easily seen from Figure 3 (a) that all the joints are located with equal distance between each other on same the ring. The top joint at the crown is numbered as first joint (joint number 1). The first joint on the first ring is numbered as joint 2. This joint is on the radius of the dome which coincides with the x axis. The joint number at the intersection of any ring and the x-axis is determined as [$J_{r1}$+ (r-1)*12] where r is the ring number and $J_{r1}$ is the first joint number of previous ring. It is worthwhile to mention that all of the first joints of the rings are located on the intersection points of that ring and the x-axis. For example the first joint number of the second ring is numbered as 2 + (2-1)*12 = 14 and it is on x-axis. Every other joint on rings is numbered in a regular sequence. Member incidences are arranged in similar manner. First member is taken as the one which is on the x axis and connects joint 1 to joint 2. The other 11 members connect joint 1 to joints 3, 4, 5, 6, 7, 8, 9, 10, 11, 12, 13 respectively. This is followed by the members that connect joints on the ring as 2-3, 3-4, 4-5, 5-6, 6-7, 7-8, 8-9, 9-10, 10-11, 11-12, 12-13 and 13-2. This process is repeated for each ring and the member incidences for all the members in the dome are determined and stored in an array.

Computation of x, y, and z coordinates of a joint on the dome requires the angle between the line that connects the joint under consideration to joint 1 and the x-axis as shown in Figure 3 (b). This angle can be calculated for joint i shown in the same Figure as:

For the odd numbered rings;

$$\alpha_i = \frac{360*(i-j_{r,1})}{12} \qquad 1(a)$$

For the even numbered rings;

$$\alpha_i = \frac{360*(i-j_{r,1})}{24} \qquad 1(b)$$

where $\alpha_i$ is shown in Figure 3(b), r is the ring number that joint i is placed on it and j is the first joint number on the ring number r which is on the x-axis. For example, the angle between the radius that connects joint 1 to joint 4 located on a odd numbered ring (ring 1) and the x-axis;

$$\alpha_4 = \frac{360*(4-2)}{12} = 60^o \qquad 1(c)$$

On the other hand, the angle between the radius that connects joint 1 to joint 19 located on a even numbered ring (ring 2) and x-axis;

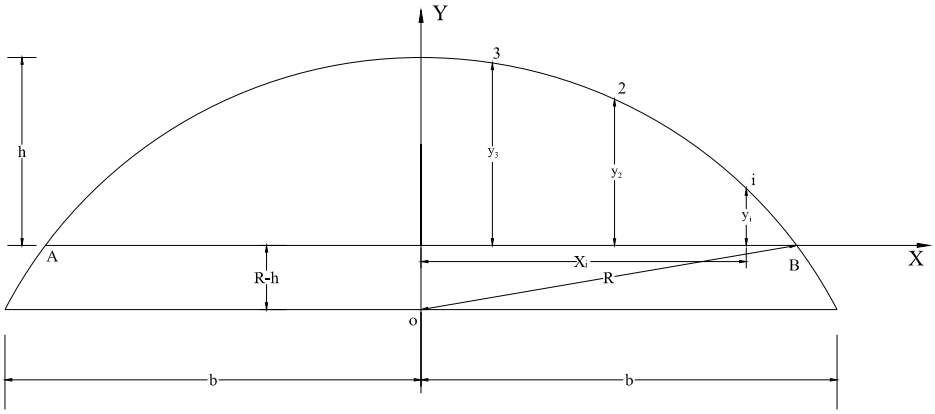


(a) Elevation

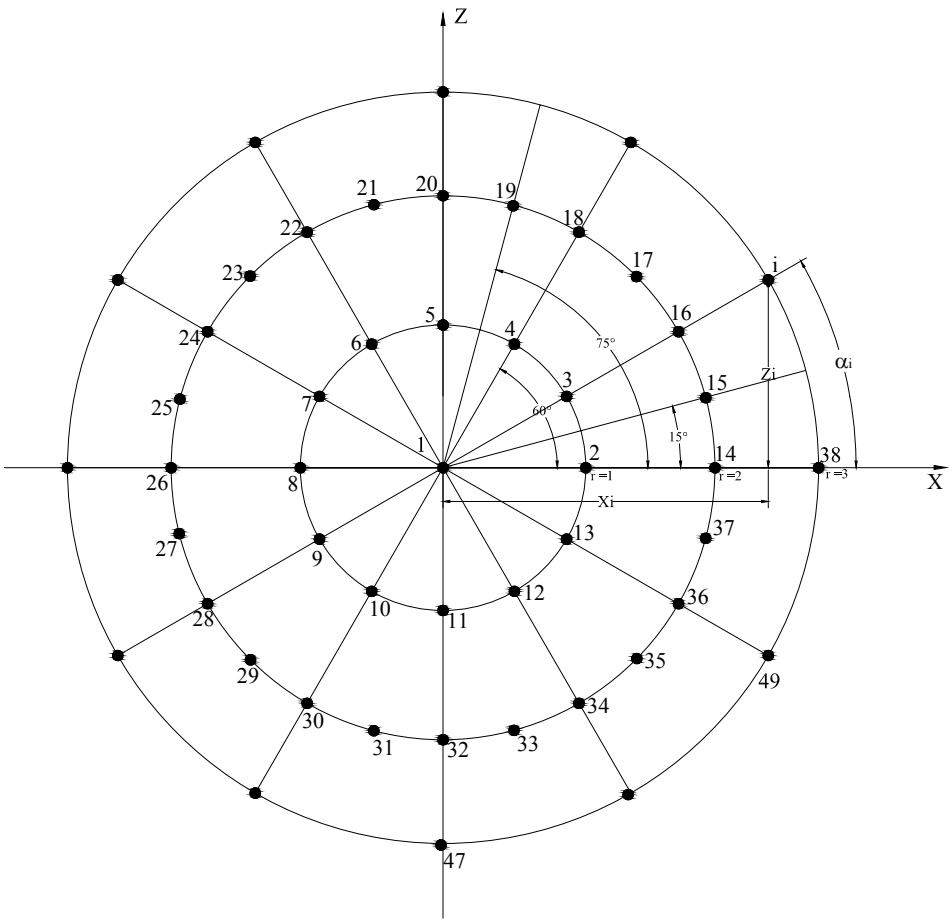


(b) Plan

Figure 3. Automated computation of joint coordinates in a network dome

$$\alpha_{19} = \frac{360^{\circ}*(19-14)}{24} = 75^{\circ} \qquad 1(d)$$

The $x_i$ and $z_i$ coordinates of joint i can be calculated as;

$$\left.\begin{aligned} x_i &= ra\cos(\alpha_i) \\ z_i &= -ra\sin(\alpha_i) \end{aligned}\right\} \qquad 1(e)$$

where r is the ring number that joint i is on and a is the radius of ring r in x-z plane. If the distance between rings are equal to a, then a becomes *D/(2n$_r$)*. The $y_i$ coordinate of joint i;

$$y_i = \sqrt{R^2 - x_i^2 - \left(\sqrt{R-h}\right)} \qquad 1(f)$$

where R is the radius of the semi-circle shown in Figure 3 (a) computed from $(D^2 + 4h^2) / (8h)$. The use of Eqs. 1(e) and 1(f) for each joint makes it possible to obtain the coordinates of joints in the dome automatically.

## 3. Optimum Design of Lamella Domes According to LRFD

It is assumed in this study that members of lamella dome will be made out of standard pipe sections. The design variables are selected as the total number of rings in the dome, height of the crown and the pipe sections that are to be selected for member groups in the dome. Once the geometry of the dome is established by selecting values for the total number of rings and the height of crown, and then the design problem turns out to be the selection of appropriate pipe sections from the available section list. This should be carried out in such way that the dome satisfies the serviceability and strength requirements specified by the code of practice while the economy is observed in the overall or material cost of the dome. When the design constraints are implemented from LRFD-AISC, the following mathematical model is obtained for the optimum design problem.

$$\min W = \sum_{i=1}^{ng} m_i \sum_{j=1}^{s_i} l_j \qquad 2(a)$$

Subject to;

$$\delta_k < \delta_{ku} \quad , \quad k=1,2,.....,p \qquad 2(b)$$

For $\dfrac{P_u}{\phi P_n} \geq 0.2$

$$\frac{P_u}{\phi P_n} + \frac{8}{9}\left(\frac{M_{ux}}{\phi_b M_{nx}} + \frac{M_{uy}}{\phi_b M_{ny}}\right) \leq 1 \qquad 2(c)$$

For $\frac{P_u}{\phi P_n} < 0.2$

$$\frac{P_u}{2\phi P_n} + \left(\frac{M_{ux}}{\phi_b M_{nx}} + \frac{M_{uy}}{\phi_b M_{ny}}\right) \leq 1 \qquad 2(d)$$

$$\phi_v V_{nr} \geq V_{ur} \quad , \; r=1,2,.....,nm \qquad 2(e)$$

where $m_i$ in Eq. 2(a) gives the unit weight of the pipe section selected from steel pipe section list of LRFD-AISC for the network dome member belonging to group i, $s_i$ is the total number of members in group i, and $ng$ is the total number of groups in the dome structure. $l_j$ is the length of member j. $\delta_k$ in Eq. 2(b) is the displacement of joint k and $\delta_{ku}$ is its upper bound. p is the total number of restricted displacements.

Eq. 2(c) and Eq. 2(d) represent the strength requirements for a member subjected to both bending and axial force according to LRFD. In this inequalities $\phi_b$ is the resistance factor for flexure given as 0.9, $\phi$ is the resistance factor for compression given as 0.85, $M_{ux}$ is the required flexural strength relating to strong axis (x) bending, $M_{uy}$ is the required flexural strength relating to weak axis (y) bending, $M_{nx}$ and $M_{ny}$ are the nominal flexural strength relating to strong axis (x) bending and weak axis (y) bending respectively. $P_u$ is the required compressive strength, and $P_n$ is the nominal compressive strength which is computed from;

$$P_n = A_g F_{cr} \qquad 2(f)$$

where $F_{cr}$ is calculated as in the following;

$$\text{For } \lambda_c \leq 1.5 \qquad F_{cr} = (0.658^{\lambda_c^2})F_y \qquad 2(g)$$

$$\text{For } \lambda_c > 1.5 \qquad F_{cr} = \left[\frac{0.877}{\lambda_c^2}\right] F_y \qquad 2(h)$$

where in Eq. 2(f) $A_g$ is the gross area of a lamella dome member, and $F_{cr}$ is found from Eq. 2(g) or 2(h) in which $F_y$ is the specified yield stress taken as 250MPa and $\lambda_c$ is obtained from;

$$\lambda_c = \frac{Kl}{r\pi}\sqrt{\frac{F_y}{E}} \qquad 2(j)$$

where K is the effective length factor taken as 1, $l$ is the length of a dome member, r is governing radius of gyration about the axis of buckling, and E is the modulus of elasticity.

Eq. 2(e) represents the shear strength requirement in load and resistance factor design according to LRFD. In this inequality $\phi_v$ represents the resistance factor for shear given as 0.9, $V_{nr}$ is the nominal strength in shear and $V_{ur}$ is the factored service load shear for member r.

## 4. Harmony Search Method

The solution of the optimum design problem described from Eq. 2(a) to Eq. 2(e) is obtained by harmony search algorithm. This meta-heuristic method imitates the improvisation process of a musician seeking a pleasing harmony. Musician can play a note from existing memory or perform variations on an existing piece or create an entirely new piece. These actions represent the basic three operations of the harmony search method. As shown in Figures 4(a), (b) and (c) a note can be played from nice songs stored in memory or a note can be played close in pitch to one that is in the memory or a note can be played totally randomly from the entire range of the instrument.

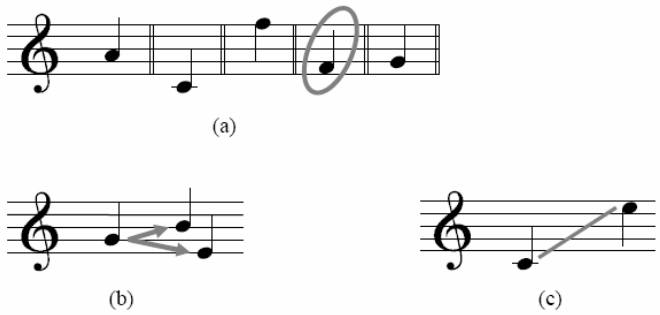


Figure 4. Improvision process of a musician; (a) playing from memory, (b) pitch adjusting, (c) random playing.

The harmony search algorithm consists of five basic steps. The detailed explanation of these steps can be found in [14] which are summarized in the following:

**Step 1:** Harmony search parameters are initialized
A possible value range for each design variable of the optimum design problem is specified. A pool is constructed by collecting these values together from which the algorithm selects values for the design variables. Furthermore the number of solution vectors in harmony memory (HMS) that is the size of the harmony memory matrix, harmony considering rate (HMCR), pitch adjusting rate (PAR) and the maximum number of searches are also selected in this step.

**Step 2:** Harmony memory matrix (HM) is initialized
Harmony memory matrix is initialized. Each row of harmony memory matrix contains the values of design variables which are randomly selected feasible solutions from the design pool for that particular design variable. Hence, this matrix has n columns where N is the total number of design variables and HMS rows which is selected in the first step. HMS is similar to the total number of individuals in the population matrix of the genetic algorithm. The harmony memory matrix has the following form:

$$[\mathrm{H}] = \begin{bmatrix} x_{1,1} & x_{2,1} & .. & .. & x_{n-1,1} & x_{n,1} \\ x_{1,2} & x_{2,2} & .. & .. & x_{n-1,2} & x_{n,2} \\ .. & .. & .. & .. & .. & .. \\ .. & .. & .. & .. & .. & .. \\ x_{1,hms-1} & x_{2,hms-1} & .. & .. & x_{n-1,hms-1} & x_{n,hms-1} \\ x_{1,hms} & x_{2,hms} & .. & .. & x_{n-1,hms} & x_{n,hms} \end{bmatrix} \tag{3}$$

$x_{i,j}$ is the value of the i$^{th}$ design variable in the j$^{th}$ randomly selected feasible solution. These candidate designs are sorted such that the objective function value corresponding to the first solution vector is the minimum. In other words, the feasible solutions in the harmony memory matrix are sorted in descending order according to their objective function value. It is worthwhile to mention that not only the feasible designs that are those which satisfy the constraints inserted into harmony memory matrix. Those designs having a small infeasibility are also included in the harmony memory matrix with a penalty on their objective function. A detailed flowchart for the improvisation of a new harmony memory matrix is given in Figure 5.

**Step 3:** New harmony memory matrix is improvised
In generating a new harmony matrix the new value of the i$^{th}$ design variable can be chosen from any discrete value within the range of i$^{th}$ column of the harmony memory matrix with the probability of $HMCR$ which varies between 0 and 1. In other words, the new value of $x_i$ can be one of the discrete values of the vector $\{x_{i,1}, x_{i,2}, ....., x_{i,hms}\}^T$ with the probability of $HMCR$. The same is applied to all other design variables. In the random selection, the new value of the i$^{th}$ design variable can also be chosen randomly from the entire pool with the probability of $1 - HMCR$. That is

$$x_i^{new} = \begin{cases} x_i \in \{x_{i,1}, x_{i,2}, .....x_{i,hms}\}^T & \textit{with probability HMCR} \\ x_i \in \{x_1, x_2, ....., x_{ns}\}^T & \textit{with probability } (1 - HMCR) \end{cases} \tag{4}$$

where $ns$ is the total number of values for the design variables in the pool. If the new value of the design variable is selected among those of harmony memory matrix, this value is then

checked whether it should be pitch-adjusted. This operation uses pitch adjustment parameter *PAR* that sets the rate of adjustment for the pitch chosen from the harmony memory matrix as follows:

$$Is \;\; x_i^{new} \; to \; be \;\; pitch-adjusted? \left\{ \begin{array}{ll} Yes & with\ probability\ of\ PAR \\ No & with\ probability\ of\ (1-PAR) \end{array} \right\} \tag{5}$$

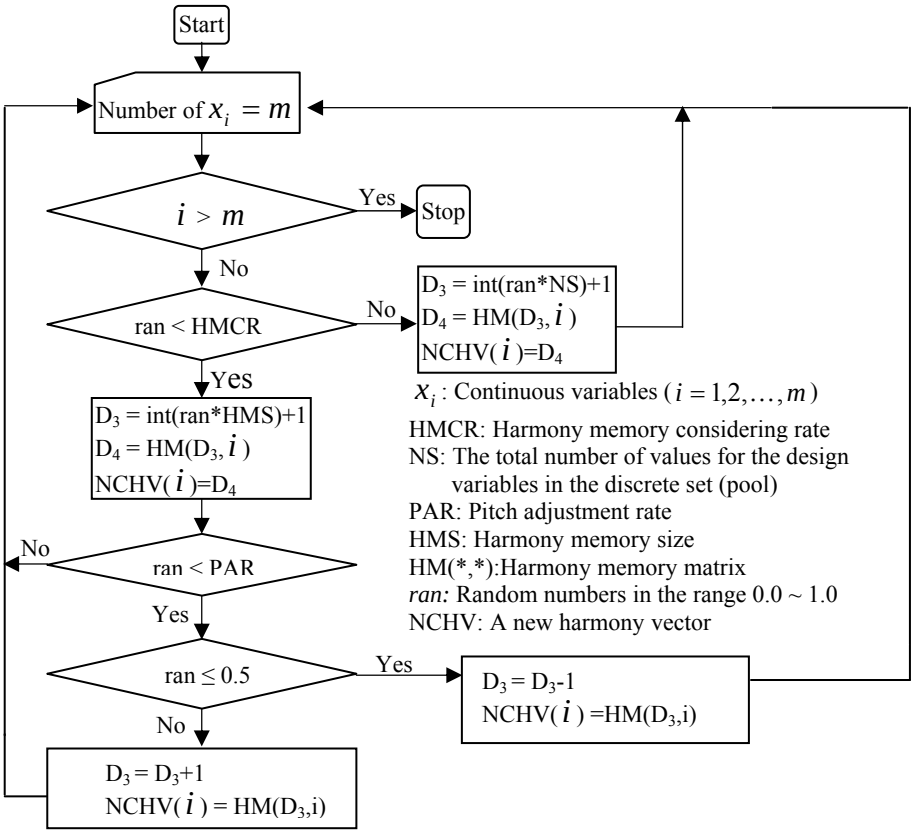


Figure 5. Improvisation of a new harmony memory vector

Supposing that the new pitch-adjustment decision for $x_i^{new}$ came out to be *yes* from the test and if the value selected for $x_i^{new}$ from the harmony memory is the k$^{th}$ element in the general discrete set, then the neighbouring value k+1 or k–1 is taken for new $x_i^{new}$. This operation prevents stagnation and improves the harmony memory for diversity with a greater changing of reaching the global optimum. Once the new harmony vector $x_i^{new}$ is obtained using the above-mentioned rules, it is then checked whether it violates problem constraints. If the new harmony vector is severely infeasible, it is discarded. If it is slightly infeasible, it is included in the harmony memory matrix. In this way the violated harmony vector which may be infeasible slightly in one or more constraints is used as a base in the pitch adjustment operation to provide a new harmony vector that may be feasible. These is carried out by using larger error values such as 0.08 initially for the acceptability of the new design vectors and

reduce this value gradually during the design cycles and use finally an error value of 0.001 towards the end of iterations. This adaptive error strategy is found quite effective in handling the design constraints in large design problems.

**Step 4:** Harmony Memory matrix is updated
After selecting the new values for each design variable the objective function value is calculated for the new harmony vector. If this value is better than the worst harmony vector in the harmony matrix, it is then included in the matrix while the worst one is taken out of the matrix. The harmony memory matrix is then sorted in descending order by the objective function value.

**Step 5:** Termination criteria
Steps 3 and 4 are repeated until the termination criterion which is the pre-selected maximum number of cycles is reached. This number is selected large enough such that within this number of design cycles no further improvement is observed in the objective function.

## 5. Elastic Critical Load Analysis of Spatial Structures

The behaviour of latticed domes is nonlinear due to change of geometry under external loads. This is due to the imperfections arising either from the manufacturing process and/or from the construction of the structure. Furthermore they are sometimes subjected to equipment loading concentrated at the crown in addition to uniform gravity loading. This also makes it necessary to check the overall stability during the analysis to ensure that the structure does not lose its load carrying capacity due to instability. The elastic instability analysis of space frames involves repeated stiffness method analysis of the structure at progressively increasing load factor. At each increment of the load factor, nonlinear analysis of the structure is carried out. For this, the stiffness matrix for a three-dimensional space member that includes the effect of flexure on axial stiffness and the stiffness against translation is derived. The details of this derivation and related terms of a nonlinear stiffness matrix of a space member are given in [16, 17]. The stiffness matrix of a stable structure is positive-definite. During the nonlinear analysis iteration, the determinant of the overall stiffness matrix is checked to determine whether at any load increment it becomes negative. This is an indication of a loss of stability of the structure and the load factor which causes this is identified as the critical load factor. The detailed steps of the elastic instability analysis of space frames are given in [4-7]. In order to show the effect of nonlinearity in the behaviour of network domes, linear and non-linear Y-displacement of joint 1 of the network dome shown in Figure 2 is plotted under different concentrated loads in Figure 6. It is apparent from the figure that under 1200kN, nonlinear displacement is 21.79% more than the linear displacement. Hence, it is clear that if the realistic behaviour of a network dome is to be used in its optimum design, the geometric nonlinearity of the structure is required to be considered.

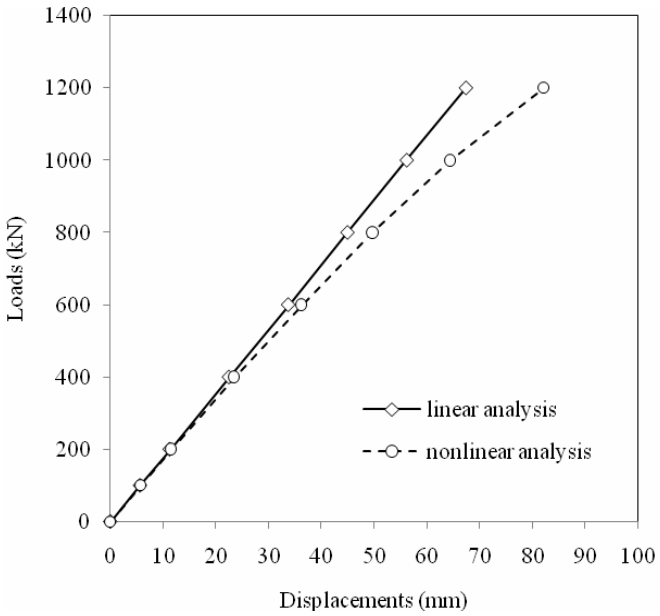


Figure 6. Linear and nonlinear Y-displacements of joint 1 of the network dome

## 6. Optimum Design Algorithm

The optimum design algorithm developed for single layer network domes based on harmony search method treats the total number of rings, the height of the crown and the tubular cross-sectional designations for each group in the dome as a design variable. Harmony search algorithm initiates the design process by first randomly selecting values for the total number of rings and the crown height from the design pool. This is followed by the selection of sequence numbers for the tubular sections from the available steel tubular section list that are to be adapted for member groups of the dome. Once the total number of rings and height of crown are decided, the geometry of the network dome becomes available. Furthermore, with the selection of the sequence numbers for the tubular section, the sectional designation and properties of that section becomes available for the algorithm. The design algorithm consists of the following steps:

1. Select the values of harmony parameters. The harmony memory size HMS, the harmony memory considering rate HMCR and the pitch adjustment rate PAR are selected. These values are decided after carrying out several trials in the design example.
2. Generate a harmony memory matrix. Select randomly total number rings, crown height and sequence number of a steel section from the discrete list for each group in the dome.
3. Generate the geometrical data such as member incidences joint coordinates automatically using the values selected for the total number of rings and crown height.
4. Carry out the nonlinear elastic critical load analysis of the steel dome with the tubular sections selected for member groups until the ultimate load factor is reached and check

whether there is a loss of stability at any stage of this nonlinear analysis. If the loss of stability occurs then this selected design vector is taken out from harmony memory matrix and replaced by a new design vector that is selected randomly again. This replacement process is repeated until a design vector is determined that does not have instability problem. This vector is then checked whether it satisfies the design constraints. If it does not it is once more discarded. However, if it is slightly infeasible it is considered for the harmony memory matrix.

5. Check whether the new design vector selected should be pitch-adjusted as explained in step 3 of the harmony search method.
6. Calculate the objective function value for the newly selected design vector. If this value is better than the worst harmony vector in the harmony matrix, it is then included in the matrix while the worst one is taken out of the matrix. The harmony memory matrix is then sorted in descending order by the objective function value.
7. Repeat steps 2 and 6 are until the pre-selected maximum number of iterations is reached. The maximum number of iterations is selected large enough such that within this number of design cycles no further improvement is observed in the objective function.

## 7. Design Example

The design algorithm presented is used to determine the optimum number of rings, the crown height and the circular steel hallow section designations for the single layer network dome shown in Figure 2. The design pool for the total number of rings for the dome contains 4 values that are 3, 4, 5 and 6. For the height of the crown a list is prepared starting from 1m to 8.75m with the increment of 0.25m. There are 32 values altogether for the harmony search algorithm to choose from. Among the steel pipe given in LRFD-AISC [10], 37 steel pipe sections are selected to be used as the standard table for the harmony search algorithm to select from. The sectional designations selected vary from PIPST13 to PIPDEST203 where abbreviations ST, EST, and DEST stands for standard weight, extra strong, and double-extra strong respectively. The modulus of elasticity for the steel is taken as 205kN/mm$^2$. The diameter of the dome is taken as 20m. The dome is considered to be subjected to equipment loading of 500kN at its crown. The limitations imposed on the joint displacements are given in Table 1.

Table 1. Displacement restrictions of the single layer lamella dome

| **Joint number** | **Displacement restrictions (mm)** | | |
|---|---|---|---|
| | **X-direction** | **Y-direction** | **Z-direction** |
| 1 | - | - | 28 |
| 2 | 33 | 33 | 28 |
| 3 | 33 | 33 | 28 |

Harmony memory matrix size is initially taken as 20. However, the same example is designed several times using different harmony memory matrix size which was changed from 20 to 50. In the mean time harmony memory considering rate (HMCR) and pitch-adjusting rate (PAR) are varied between 0.60 to 0.90 and 0.10 to 0.45 respectively in order to determine the most suitable values for the design problem under consideration. The optimum result reported here corresponds to those that are having the least weight. It is apparent from this study that the selection of the above parameters is problem dependent. The total number of searches carried out is taken as 20000 in each design case. This number is determined after carrying out several designs with a larger number of searches. It is noticed that the result obtained within the 20000 searches remains the same even if the search continues for a better design. The design obtained in the last search is considered to be the optimum solution.

Table 2. Optimum design for the single layer network dome

| **Group Number** | **Optimum Section Designations** |
|---|---|
| 1 | PIPST 127 |
| 2 | PIPEST 89 |
| 3 | PIPST 64 |
| 4 | PIPEST 51 |
| 5 | PIPEST 51 |
| 6 | PIPEST 13 |
| Optimum Number of Rings | 3 |
| Optimum Height (m) | 5 |
| Max. Displacement (mm) | 2.66 |
| Max. Strength Ratio | 1.00 |
| Weight (kg) | 4277 |

The members grouping is decided such that members between each ring are to be made one group and the members on each ring are another group. The diagonal members between the crown and the first ring are group 1, the members on the first ring are group 2, the members between ring 1 and 2 are group 3 and the group number of members on the ring 2 is 4 and so forth, then the total number of groups in the dome becomes twice the total number of rings in the design problem. For example if the total number of rings in the dome is selected as three, then the remaining design variables becomes 7, six of which are the sectional designations to be selected for each group and the last one is the height of the dome. The optimum sectional designations for each group and the height of the dome obtained for the dome with 3 rings are given in Table 2. It is noticed that the strength limitations are dominant in the design problem. In the optimum dome while the strength ratios were equal to 1, the restricted displacement is much less than their upper bound.

## 8. Conclusions

The harmony search method is used to develop an optimum design algorithm for single layer network dome. This method is a new stochastic random search approach that simulates the musical process of searching for a perfect state of harmony. It is shown that this technique is mathematically quite simple but effective in finding the solutions of combinatorial optimization problems. It neither needs initial starting values for the design variables nor a population of candidate solutions for the design problem. The optimum design algorithm presented determines the total number of rings, the optimum height and the optimum steel section designations for the members of single layer lamella dome from the available steel pipe sections table and implements the design constraints from LRFD-AISC. The results obtained showed that the harmony search method is an efficient and robust technique that can successfully be used in optimum topology design of single layer lamella domes. Furthermore, the global stability of the dome is required to be checked during the design process due to the fact that the height of the dome varies to large extent from one design cycle to another.

**Acknowledgement:** Authors would like to thank Dr. Z.W. Geem for providing the computer code for the harmony search method.

## References

1. Benjamin BS. *The Analysis of Braced Domes*, Asia Publishing House, 1963.
2. Makowshi ZS. Editor Analysis, *Design and Construction of Braced Domes*, Granada Publishing Ltd., 1984.
3. Coates RC, Coutie MG, Kong FK. *Structural analysis*, UK: Thomas Nelson and Sons Ltd., 1972.
4. Saka MP, Ulker M. Optimum design of geometrically nonlinear space trusses, *Journal of Computers and Structures,* **42**(1992)289-99.
5. Çarbaş S, Saka MP. A harmony search algorithm for optimum topology design of single layer lamella domes, *Proceedings of the Ninth International Conference on Computational Structures Technology,* Ed BHV Topping, Athens-Greece, 2-5 September, Civil-Comp Press , 2008.
6. Kameshki EK, Saka MP. Genetic algorithms steel frames with various semi-rigid computers and structures, *Journal of Constructional Steel Research*, **59**(2003)109-34.
7. Saka MP, Hayalioglu MS. Optimum design of geometrically nonlinear elastic plastic steel frames, *Journal of Computers and Structures*, **38**(1991)329-44.
8. Saka MP. Optimum Geometry Design of Geodesic Domes Using Harmony Search Algorithm, *Advances in Structural Engineering*, **10**(2007) 595-606.
9. Saka MP. Optimum topological design of geometrically nonlinear single layer latticed domes using coupled genetic algorithm, *Computers and Structures*, **85**(2007)1635-46.

10. LRFD-AISC, Manual of Steel Construction, Load and Resistance Factor Design, Metric Conversion of the Second Edition, AISC, Vol. I and II, 1999.
11. Geem ZW, Kim JH. A new heuristic optimization algorithm: Harmony search, *Journal of Simulation*, No. 2, **76**(2001)60-68.
12. Geem ZW. Improved harmony search from ensemble of music players, *Lecture Notes in Artificial Intelligence*, 4251, 86-93, 2006.
13. Saka MP**.** Optimum Design Of Steel Frames Using Stochastic Search Techniques Based On Natural Phenomena: A Review, *Civil Engineering Computations: Tools and Techniques*, Ed BHV Topping, Saxe-Coburgh Publications, pp.105-47, 2007.
14. Geem ZW. Optimal cost design of water distribution networks using harmony search, *Journal of Engineering Optimization*, **38**(2006) 259-280.
15. MP Saka**.** Optimum design of steel sway frames to BS5950 using harmony search algorithm, *Journal of Constructional Steel Research*, (Accepted for publication**),** 2008.
16. Majid KI. Nonlinear Structures, *Butterworth*, 1972.
17. Ekhande SG, Selvappalam M, and Madugula KS. Stability Functions for Three-Dimensional Beam-Columns, *Journal of Structural Engineering*, *ASCE*, **115**(1989) 467-79.