ASIAN JOURNAL OF CIVIL ENGINEERING (BUILDING AND HOUSING) VOL. 12, NO. 2 (2011)
PAGES 205-217

POTENTIAL REUSE OF WASTE RICE HUSK AS FIBRE COMPOSITES IN CONCRETE

M. Sivaraja[*a] and S. Kandasamy[b]
[a]Department of Civil Engineering, Kongu Engineering College, Erode, Tamilnadu
[b]Anna University – Tiruchirappali, Ariyalur Campus, Tamilnadu, India

ABSTRACT

Performance enhancement of non-engineered infra-structural systems in rural areas with locally available materials has become necessary in current day technology, mainly to counter unanticipated loads like Earthquake. In many smaller towns and villages in southern parts of India, materials result in the form of fibers and granular materials as waste. This paper is aimed to characterize the structure related properties of concrete composite with locally available rice husk fibers, for achieving reasonable energy absorbing capacity. Experimental investigations were performed to find the mechanical, shear, impact and flexural properties of concrete with and without rice husk composites. Microstructure of as received and reacted rice husk fibers with concrete for two years are also studied for durability considerations.

Keywords: Reuse of natural fibres; concrete composites; solid waste management; ductility; mechanical properties; rice husk

1. INTRODUCTION

In recent times, seismic effects are becoming major factors in analysis, design and construction in India. This is mainly due to the occurrence of medium to severe earthquakes in regions which were not prone earlier. Bhuj in the western India and many other cities in South India had experienced earthquakes after 1990 and earlier these parts were considered relatively non-seismic ones. Because of this unexpected change, losses in lives, property and demand for the infrastructural resources are on the rise particularly in the residential areas with majority of non-engineered systems. So, besides improving the codal provisions and construction practices, it is inevitable to utilize the easily available material from locality as construction materials using down-to-earth technology [1].

Research works in the area of seismic loadings on structures concentrate on the inelastic response in the post-yielding stage and in improving the ductility characteristics of reinforced concrete structures. An effective way in improving the post-yield performance

[*] E-mail address of the corresponding author: m.shivaraj2006@gmail.com (M. Sivaraja)

and stiffness of concrete is by randomly distributing short fibers to the concrete mix during mixing. Fibers in the tension zone contribute to improve flexural stiffness and in compression zone delay the process of disintegration and thus enabling the beams to develop greater overall ductility at failure, which substantially increases its energy absorption capabilities [2-3].

Over a half the population of the World is living in the slums and shanty towns. Uncontrolled growth of material costs drives the people towards using cost-effective and locally available construction materials. Utilization of these locally available virgin waste materials in the fiber reinforcement will be not only used to enhance the structural performance but also used to solve the tangible potential of reducing the problem of waste materials disposal in landfills [4-5]. In many smaller towns and villages in southern parts of India, rice husk is abundantly available as waste material. In this study, possibility of reusing such waste material in concrete was attempted to enhance its material characteristics without introducing sophisticated technology for production.

Since locally available waste materials are the main focus here, there is a need to qualify and quantify the characteristics of materials with a view to use them in normal constructions. In this characterization initially the basic material properties such as compressive strength, modulus of elasticity, split tensile strength, modulus of rupture, shear strength and impact strength were found. To assess the flexural performance, reinforced concrete beams with and without rice husk fibres were cast and tested under middle third flexural loading. The critical structure related properties such as ductility and energy absorption are ascertained from the load-deflection and moment-rotation curves of the experimental investigation.

Inorganic fibers are susceptible to degradation under concrete reaction. Natural fibres are prospective reinforcing materials and their use until now has been more traditional than technical. They have long served many useful purposes. Besides its ability to sustain loads [6-7], natural fibre reinforced concrete is also required to be durable. Durability relates to its resistance to deterioration resulting from external causes as well as internal causes [8]. The natural fibre composites may undergo a reduction in strength and toughness as a result of weakening of fibres by the combination of alkali attack and mineralisation through the migration of hydrogen products to lumens and spaces. Hence, here SEM studies are also carried out to examine the changes in microstructure of rice husk sample after two years which were allowed to react with concrete under alternate wetting and drying.

2. PROPERTIES OF RICE HUSK

Tests on physical and mechanical properties of chosen rice husk fiber (Figure 1) are conducted and listed in Table 1. To arrive the aspect ratio (length to cross sectional dimension), of different fibers, their dimensions are computed using Fresnel diffraction method using a He-Ne laser as a monochromatic light source. Moisture content present in the fibers is evaluated in percentage by using an oven of size 450 x 450 x 450 mm. The oven has an automatic temperature control unit with an operating range of 50-300°C. An electronic weighing machine is used to weigh the fibers. The fiber density is measured by

the pycnometric procedure. The ultimate value of tensile strength and percentage of strain are obtained for five fiber specimens and the average of these is used to compute the strength and modulus. Romildo D. Toledo Filho et al. [9] reported their study on development of vegetable fibre-mortar composites of improved durability. As used in that study, here also to improve the durability of rice husk fibres in concrete, fibres were soaked in silica fume for 2 hours, dried and used.

Figure 1. Rice husk

Table 1: Physical properties of rich husk fiber

Property	Value
Diameter (mm)	1.60
Aspect ratio	12.5
Density (kg/m^3)	564
Specific gravity	0.4
Water absorption (%)	123.7

3. EXPERIMENTAL PROGRAMME

3.1 Mix and specimens casting

In preparation of test specimens, 43 grade ordinary Portland cement, Natural River sand and stone aggregate were used. The maximum size of coarse aggregate is 19 mm. The concrete mix was designed according to Indian standards [10] to achieve 28 days cube strength of 20 MPa with constant water cement ratio of 0.5. To avoid the balling effect on concrete during mixing volume fraction of fibers was restricted to 0.5%, 1.0% and 1.5%. To avoid balling effect of fibers, first aggregates and cement were put and allowed to get mixed for one

minute and water being added within two minutes. Then fibers are uniformly dispersed throughout the mass with slow increment. Now concrete was allowed to mix for three minutes. All the specimens were well compacted using table vibrator. The specimens were demolded after 1 day and then placed in a curing tank with 90% relative humidity and 23°C for 28 days of curing. For 12 hours prior to the testing, the specimens were allowed to air dry in the laboratory.

3.2 Test set up

Fresh concrete properties such as slump test and vee bee tests were conducted as per Indian standards [11-12]. Cube specimens of 150 mm size for compressive strength, Cylinder specimens of 150 mm diameter x 300 mm height and prisms of size 500 mm x 100 mm x 100 mm were casted to study the mechanical strength properties such as compressive strength, split tensile strength and modulus of rupture according to Indian standards [13-14]. Compressometer method on cylindrical specimens having 150 mm diameter and 300 mm length was conducted to find the modulus of elasticity as per California test procedure [15]. Impact test on 150 mm diameter disc specimens was performed as per ACI committee 544 [16]. Shear strength on 'L' shaped specimens as shown in Figure 2 was conducted [17-18].

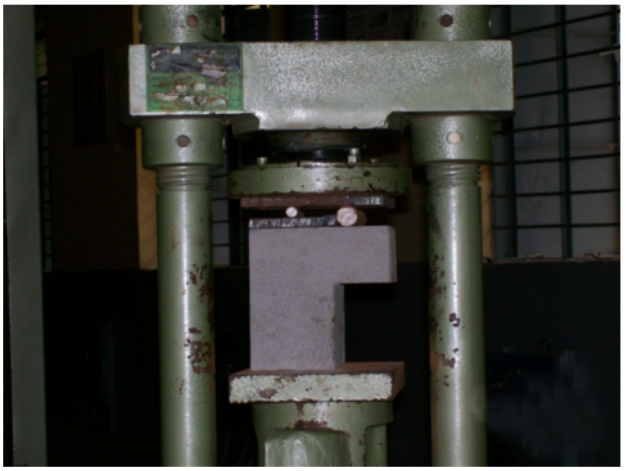

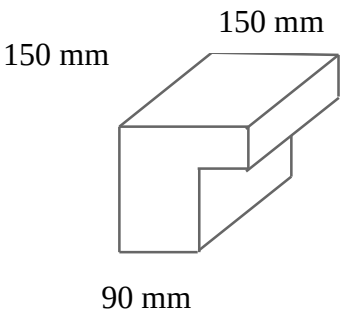

Figure 2. Shear test on L-shaped specimens

This experimental programme also consisted of fabricating reinforced concrete beams of length 2m, having identical cross section of 100 x 150 mm. Middle third flexural loading was applied on reinforced concrete beams through hydraulic jack. The specimens were placed in 100 T Loading frame and LVDTS were attached to measure the deflection readings. DEMEC as well as Electrical strain gauges with strain indicator were used to measure the strain readings both in steel reinforcement and concrete. The reinforcement detailing and flexural test set up of beam specimen are shown in Figures 3 and 4.

To examine and compare the effect on microstructure of natural fibers which are allowed to react with concrete for two years under alternate wetting and drying conditions, two types of samples were taken. One type of samples is the natural fibers used in this study

rice husk in the as received condition. The second types of samples were obtained from the fiber reinforced concrete cube specimens. The concrete cube specimens were cast with the rice husk. The water – cement ratio used was 0.5. The fiber content was restricted to 1% volume fraction of concrete volume. The fiber reinforced concrete cube specimens were allowed for initial curing of 28 days. After 28 days curing, the alternate wetting and drying process was started. The wetting was given by immersing the concrete specimens for 3 days under water. After the wetting process, the specimens were allowed to dry in open air for the remaining 4 days of a week. The specimens were subjected to this alternate wetting and drying process for two years continuously. After two years, the fibers from the concrete specimens were collected carefully by using cutters.

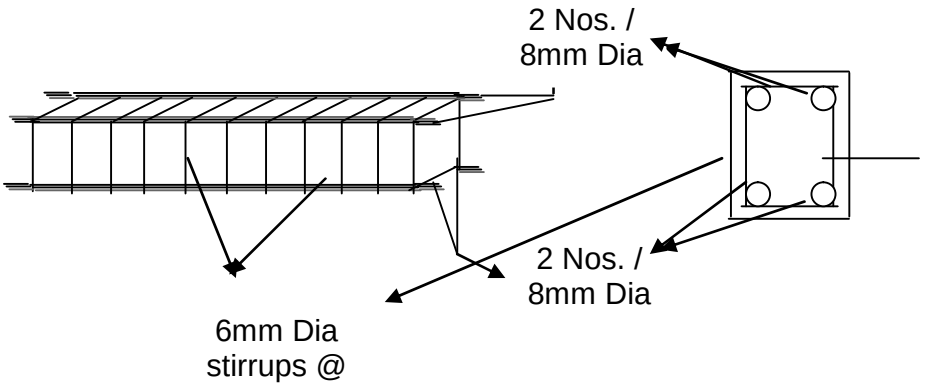

Figure 3. Reinforcement detailing of beam specimen

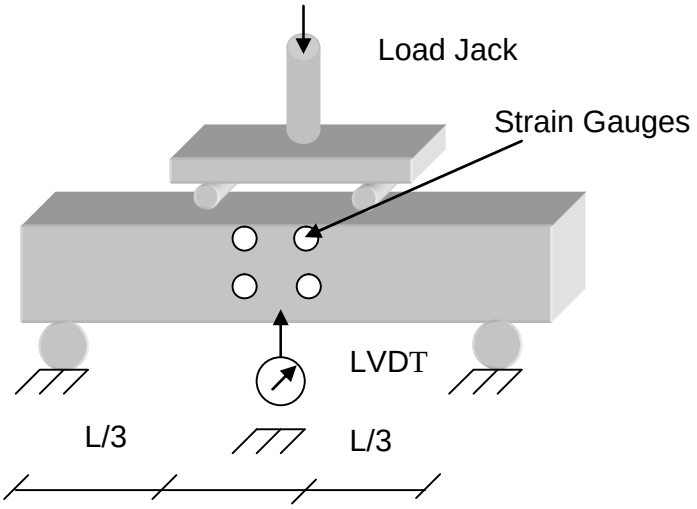

Figure 4. Flexural test setup

One of the ways to study the microstructure of fiber specimens is Scanned Electron Microscope (SEM). The instrument used for the present study is SCANNED ELECTRON MICROSCOPE LEO 440, CARL ZEISS, Germay make. It was operated at 20 kV. The fiber

specimens were gold sputtered and subjected to SEM session. On an OXFORD UK make EDX instrument which was operated at 20 kV, the EDX was conducted on the same specimens in an effort to obtain semi-quantitative compositional information. The preparation of specimens for EDS started with a high vaccum impregnation using an epoxy binder Araldite diluted in ethanol. The polymerization was completed at 40°C. Surface lapping was carried out with silica abrasive paper (13 µm). Polyshing operation was done on 1 µm diamond polyshing for 10 minutes. Every surface lapping and polyshing was intercalated using acetone cleaning. Finally the specimens were coated with Gold before the microscopy session.

4. RESULTS AND DISCUSSIONS

4.1 Workability properties

Fresh concrete properties such as slump and vee bee time of rice husk based fibre reinforced concrete specimens are listed in Table 2. The decrease in the height of slump cone is called 'slump of concrete'. It is obvious that workability is damaged by increasing the fibre content from 0.5% to 1.5% volume fraction. There was a reduction in workability in the order of 20%, 31% and 38% over conventional in concrete with 0.5%, 1.0% and 1.5% volume fraction of rice husk.

Table 2: Workability properties

Mix	Slump in mm	Vee bee time in sec
Conventional	120	1.5
Rice husk 0.5%	95	1.75
Rice husk 1.0%	82	2.00
Rice husk 1.5%	74	2.25

4.2 Mechanical strength properties

In total, 24 specimens (6 for each mix) were cast and test for each of the mechanical strength studies. The experimental results attained for different mechanical strength tests are given in Table 3. From the table it is observed that only marginal improvements were achieved in compressive strength test. Micro size of rice husk might be the reason for the less improvement in compressive properties. The indirect measure of tensile strength called split tensile strength shows a little bit improvement. The improvement is about 10% to 15%. Similarly in modulus of rupture under middle third flexural loading also showed a enhancement of 10 to 15%. The availability of fibres in concrete is high, because of their micro size. This higher amount of fibres leads the better crack reduction than conventional concrete. The performance enhancement of fibrous concrete is directly proportional to the increase in fibre content. In both the tests, the improvement in strength was attained in the

order of 8%, 12% and 15% for concrete with rice husk fibres at volume fraction of 0.5%, 1.0% and 1.5% respectively. The modulus of elasticity of concrete was calculated using compressometer method. The chord modulus of fibrous concrete of 0.5%, 1.0% and 1.5% volume fraction of rice husk fibres showed 15%, 10% and 10% improvement respectively over conventional concrete. In all the above mechanical strength tests, the co-efficient of variation in the test results of all mixes was achieved within the acceptable limit of 10%.

Table 3: Mechanical properties

Mix	f_c (MPa)	f_t (MPa)	f_m (MPa)	E (MPa)	f_s (MPa)	IE (kN.mm)	
						Crack	Failure
Conventional	27.33	2.86	4.06	21.06	6.12	940	1020
Rice husk 0.5%	27.33	3.12	4.42	22.12	6.22	1266	1550
Rice husk 1.0%	27.94	3.26	4.58	23.24	6.26	1454	1896
Rice husk 1.5%	27.98	3.48	4.64	23.83	6.68	1525	1947

f_c – Compressive strength; f_t – Split tensile strength; f_m – Modulus of rupture; E – Modulus of elasticity; f_s – Shear strength; IE – Impact energy

Shear load required to fail the L shaped specimen is called shear strength. Concrete with waste rice husk fibres shows a marginal improvement over conventional concrete because of their micro-size. Up to 1.0% volume fraction of rice husk fibres, the fibrous concrete shows any improvement in shear strength. Fibrous concrete with 1.5% volume fraction of rice husk fibres exhibit 10% improvement of shear strength over conventional concrete. Shear strength tests exhibits the co-efficient of variation from 10 to 20. Since, the shearing area of the L shaped specimen is small; the quantity of fiber available might not be uniform.

A significant improvement of 90% was achieved in the ultimate impact energy of fibrous concrete with 1.5% volume fraction of waste rice husk fibre. The impact test measures the amount of impact energy (represented by the numbers of blows) necessary to start the visible crack in fiber concrete and then to continue opening that crack until failure. The equipment for impact test consists of a standard 44.8 N compaction hammer with 457 mm drop on a 63.5 mm diameter steel ball, with the specimen appropriately placed in the positioning fixtures. The impact test is performed by dropping the hammer repeatedly and recording the number of blows required to cause the first visible crack on the top and then to failure. During the first crack, the impact energy obtained in fibrous concrete specimens with waste rice husk fibres of 0.5%, 1.0% and 1.5% are 30%, 54% and 62% respectively higher than conventional concrete specimen. Similarly 51%, 85% and 90% improvement was obtained in ultimate impact energy in rice husk based fibrous concrete specimens of 0.5%, 1.0% and 1.5% volume fractions. The co-efficient of variation of impact test results exhibits within the acceptable limit of 10%.

4.2 Flexural behavior of fiber reinforced concrete beam

Since the workability of fibrous concrete with rice husk fibrous concrete joint at 1.5% volume fraction is very low, for structural studies, two volume fractions (0.5% and 1.0%) were considered. In total, 18 numbers (6 numbers each for three type of mixes) of 2 m long reinforced concrete beams were cast and tested under middle third flexural loading. From the test results, load-deflection and moment-rotation curves were drawn and shown in Figure 5 and Figure 6. The salient points observed from the test are listed in Table 4. The first cracks were found during the load intensity of 4kN to 6 kN in all the beams. Since the beams were designed as under reinforced sections, the first yielding was occurred in the reinforcing steel. After the steel yielded, the beams were driven towards the ultimate point. Once the ultimate point was attained, the beams travelled in the post ultimate region. All the beams have failed in flexural mode by yielding of tension steel. Crushing and spalling of concrete takes place after yielding in tension zone for all the beams. Fibrous concrete beams were subjected to lesser damage when compared with conventional concrete beam. It is also observed that the cracks were closely spaced in all the fiber reinforced concrete beams consequently the crack widths were less than that of the conventional concrete beam. All the fibrous concrete beams show an increased neutral axis depth. The effectiveness of rural fibrous material in resisting external loads is thus evident right up to the failure.

The ultimate loads observed in the fibrous concrete beams of 0.5% and 1.0% are 0%, and 20% higher than the conventional concrete beam. Similarly the deflection values obtained are 1.37, and 1.25 times higher at cracking stage and 1, 1.12 and 1.2 times higher at ultimate stage than the conventional concrete beam for 0.5%, 1.0% and 1.5% volume fraction of fibrous beams respectively. During cracking stage, the rotation values obtained in the fibrous concrete beams does not show much difference. But, when the rotation values during the ultimate stage are considered, the differences are 1.17, 1.29 and 1.35 higher than the conventional beam values.

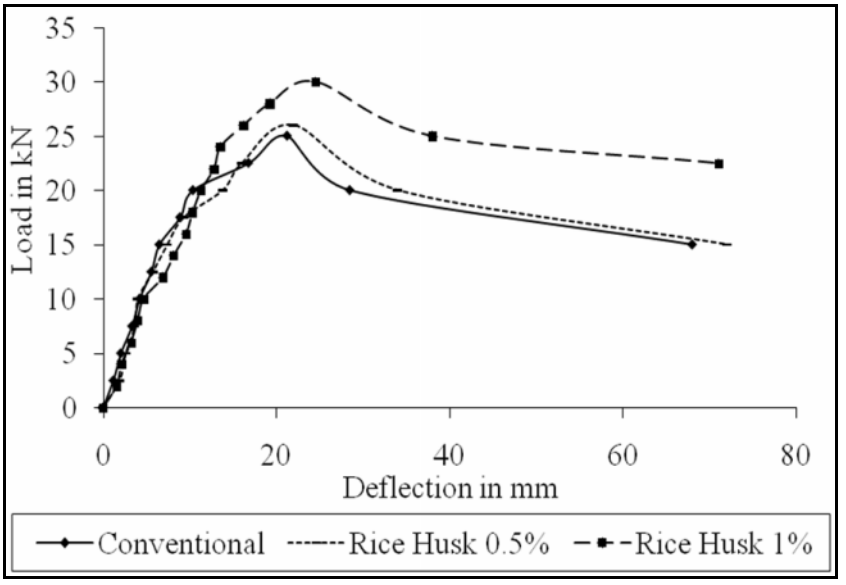

Figure 5. Load – deflection curve

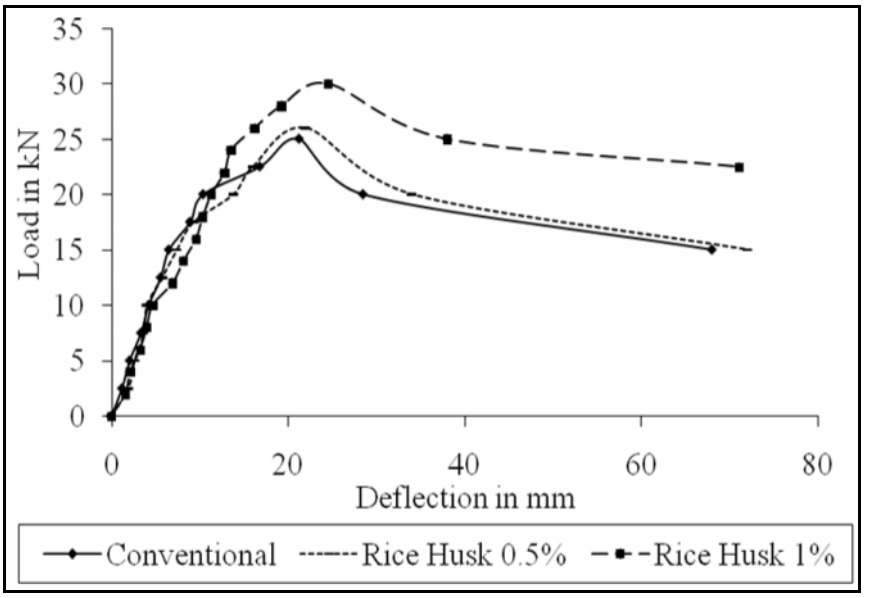

Figure 6. Moment - rotation curve

Table 4: Flexural test results

Type of concrete	P_{cr}	δ_{cr}	P_u	δ_u	M_{cr}	θ_{cr}	M_u	θ_u	μ_{dd}	μ_{rd}	EA_{sys}	EA_{sec}
Conventional	5	2	25	21.7	1.5	6	7.5	34	2.07	1.52	225	128
Rice husk 0.5%	5	2.75	25	22	1.5	6.2	7.5	40	2.32	2.36	274	156
Rice husk 1.0%	5	2.5	30	24.5	1.5	6.4	9	44	2.23	3.15	348	242

P_{cr} – Cracking load; δ_{cr} – Cracking deflection; P_u – Ultimate load; δ_u – Ultimate deflection; M_{cr} – Cracking moment; θ_{cr} – Cracking rotation; M_u – Ultimate load; θ_u – Ultimate rotation, μ_{dd} – Deflection ductility; μ_{rd} – Rotational ductility; EA_{sys} – System energy absorption; EA_{sec} – Section energy absorption

It is desirable to define response indices to describe the beam behaviour quantitatively. In seismic design, the inelastic deformation is generally quantified using ductility parameters. This includes displacement ductility, μ_{Δ},, rotational ductility, $\mu_{\varnothing}$, and energy absorption capacity E_a, (which is defined as the area under the load-deflection curve). In members where no strength degradation takes place and the section capacity keeps increasing with increased deformation until failure. The energy dissipation capacity and ductility parameters of system displacement as well as section rotation are shown in Table 4. From the table it is observed that a significant enhancement was achieved in rotational ductility and energy absorption capacities of reinforced concrete beams.

4.3 Micro-structural studies

The rice husk fresh sample which is shown in Figure 7 exhibits a deep pore with hills and trough having a smoothened surface. Deep pores or larger canal are absent because of the broken strands. Penetration into the fibre by the mix is difficult as observed in Figure 9 may be non-existence of a pore also the decreased desiccators shrinkage of fibers. Since the surface is smooth, the mix is assumed to be only coated but with less bonding characteristics. Examination of the specimens shows an impregnation of the fibre walls by calcium and silicon to minor extent. Silicon in the case of reacted rice husk with concrete is retained at the same concentration as shown in Figure 10 Silicon is expected to be in crystalline phase favouring silicon dioxide formation. A calcium rich species is assumed to calcite formation.

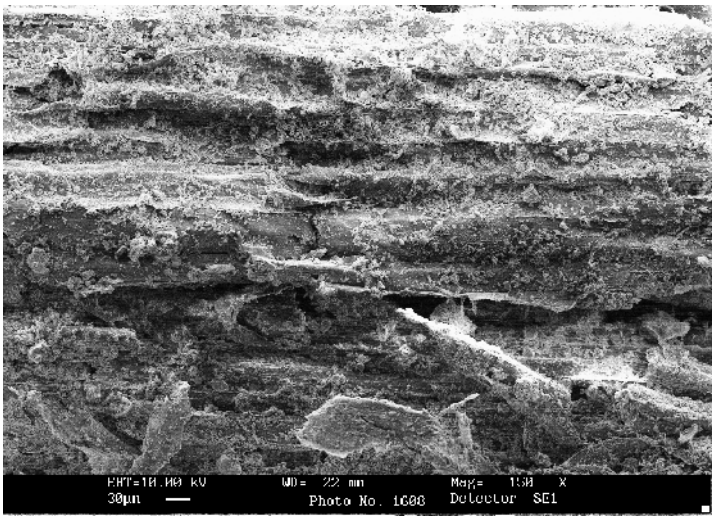

Figure 7. SEM of fresh rice husk

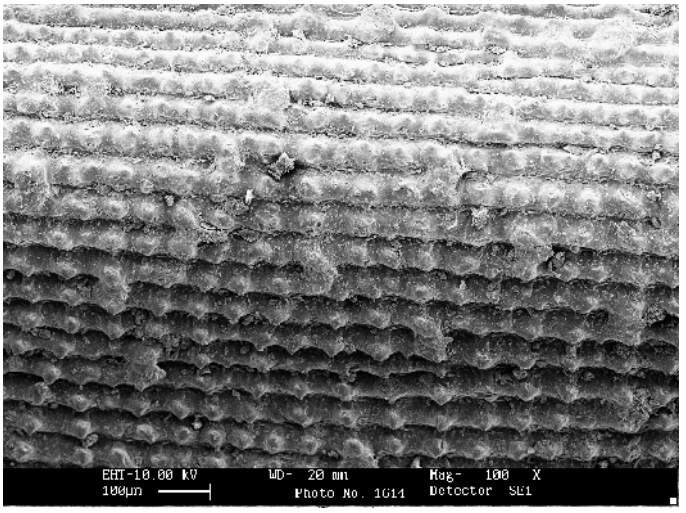

Figure 8. SEM of reacted rice husk

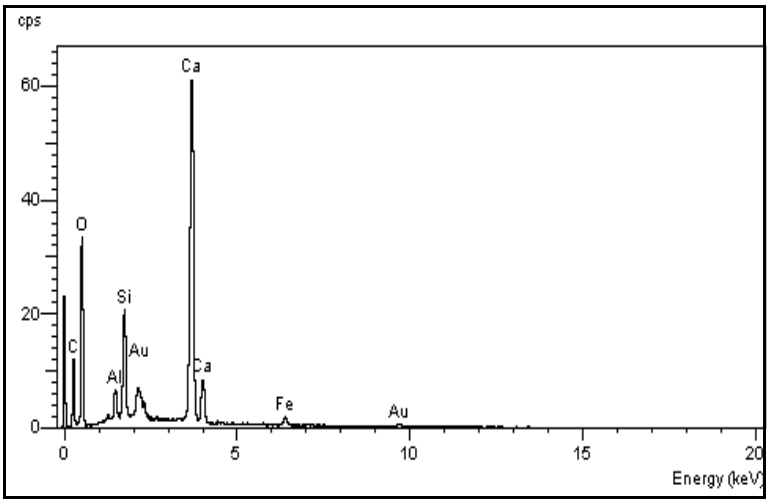

Figure 9. EDAC of fresh rice husk

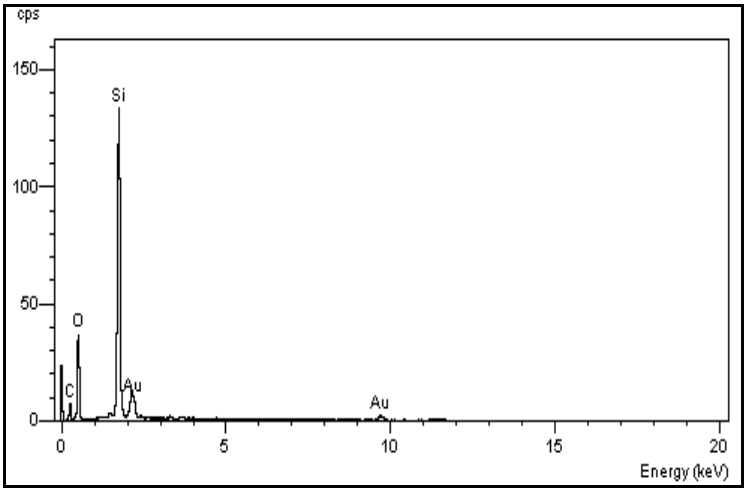

Figure 10. EDAC of reacted rice husk

5. CONCLUSIONS

To evaluate the possibility of reusing the locally available waste rice husk fiber composites in concrete, totally 144 companion specimens for mechanical strength studies and 24 reinforced concrete beams were cast and tested. The following conclusions are made based on the experimental investigation:

- Obviously, addition of rice husk fibres reduces the workability of concrete.
- Although compressive strength of concrete of rice husk based fibrous concrete does not show major improvement, the significant properties such as tensile strength, modulus of rupture and impact strength have shown significant improvement. Since

concrete is strong in compression, improvement in remaining properties exhibit the possibility of reusing the rice husk in concrete construction.

- In flexural tests, the performance of fibrous concrete beam with 1.0% volume fraction showed better performance both in load-deflection and moment-rotation behaviours.
- Both the displacement as well as rotational ductility of concrete is enhanced significantly. The energy absorbing capacity of concrete is greatly increased due to the addition of rice husk fiber. The enhancement is about 30% - 60%.
- Failure of controlled concrete is sudden and whereas in composite beams multiple cracking were formed before failure and also no crushing and spalling of concrete during the failure.
- SEM and EDS analyses confirmed the boundary of fibre-matrix transition zone have excellent adhesion. The impregnation of calcium content on the fibre walls showed the better strength enhancement. Hence, rice husk in concrete did not subject to damage significantly over the years.
- Hence locally available waste rice husk can be reused as fibre composites in concrete construction to improve the performance of structures marginally.

Acknowledgement: The authors gratefully acknowledge the financial support extended by the Coir Board (Ministry of Agro and Industries, Government of India) to carry out this research project.

REFERENCES

1. Sivaraja M, and Kandasamy S. Characterization of concrete composites for energy absorption. *Journal of Reinforced Plastics and Composites*, No. 2, **27**(2008) 135-44.
2. Kemp AR. The achievement of ductility in reinforced concrete beams. *Magazine of Concrete Research*, No. 2, **50**(1998) 123-32.
3. Thirugnanam GS, Govindan P. Sethurathnam A. Ductile behaviour of SIFCON structural members. *Journal of Structural Engineering*, No. 1, **28**(2001) 27-32.
4. Youjiang W, Wu-H. C, and Victor C. Li. Concrete reinforcement with recycled fibers. *Journal of Materials in Civil Engineering*, No. 4, **12**(2000) 314-19.
5. Sivaraja M, Kandasamy S. Characterization of natural fibres as concrete composites for energy absorption. *International Journal of Materials and Product Technology*, Nos. 1-4, **36**(2009) 385-95.
6. Al-Oraimi SK, Seibi AC. Mechanical characterization and impact behaviour of concrete reinforced with natural fibres. *Composite Structures*, **32**(1995) 165-71.
7. Ramakrishna G, Sundararajan T. Impact Strength of a few natural fibre reinforced cement mortar slabs: a Comparative Study. *Cement & Concrete Composites*, **27**(2005) 547-53.
8. Aziz MA, Paramasivam P, and Lee SL. Concrete reinforced with Natural Fibers. New Reinforced Concretes Ed: Swamy RN, Surrey University Press, (1984), pp. 106-140.
9. Romildo D, Toledo F, Ghavami Kh, and George L. England and Scrivener K.

Development of vegetable fibre-mortar composites of improved durability. *Cement & Concrete Composites*, **25**(2003) 185-96.

10. IS 10262 – 1982 Indian Standard Recommended Guidelines for concrete Mix Design, 5th Print March 1997. Bureau of Indian Standards, New Delhi – 110 002.
11. IS 7320 – 1974 Specification for Concrete Slump Test Apparatus, January 1999. Bureau of Indian Standards, New Delhi – 110 002.
12. IS 10510 – 1983 – Specification for Vee – Bee Consistometer, January 1999. Bureau of Indian Standards, New Delhi – 110 002.
13. IS – 516 – 1959 Indian Standard Methods of Test for Strength of Concrete, 13th reprint, June 1989. Bureau of Indian Standards, New Delhi – 110 002.
14. IS 5816 – 1970 Indian Standard Methods of tests for Splitting Tensile Strength of Concrete Cylinders, 3rd Print, October 1985. Indian Standard Institute, New Delhi – 110 002.
15. California Test 522, Method of Test for Chord Modulus of Elasticity of Concrete. State of California-Business and Transportation Agency, 2000, pp. 1-2.
16. ACI Committee 544 Measurement of properties of fiber reinforced concrete, ACI 544-2R- 89. American Concrete Institute, Detroit. 1988:7.
17. Baruah P, and Talukdar S. A Comparative study of compressive, flexural, tensile and shear strength of concrete with fibers of different origins. *The Indian Concrete Journal*, (2007) 17-24.
18. Bairagi NK, and Modhera CD. Shear strength of fibre reinforced concrete. *ICI Journal*, (2001) 47-53.